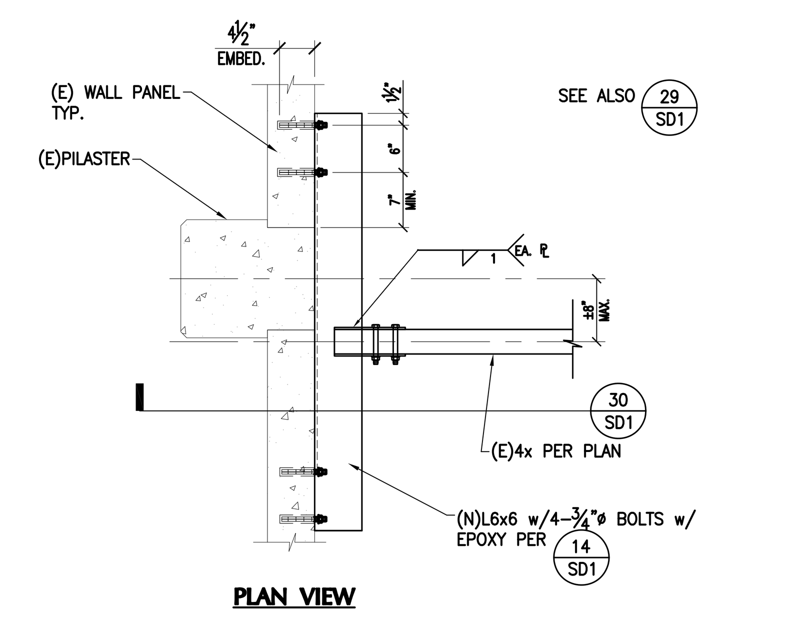

1

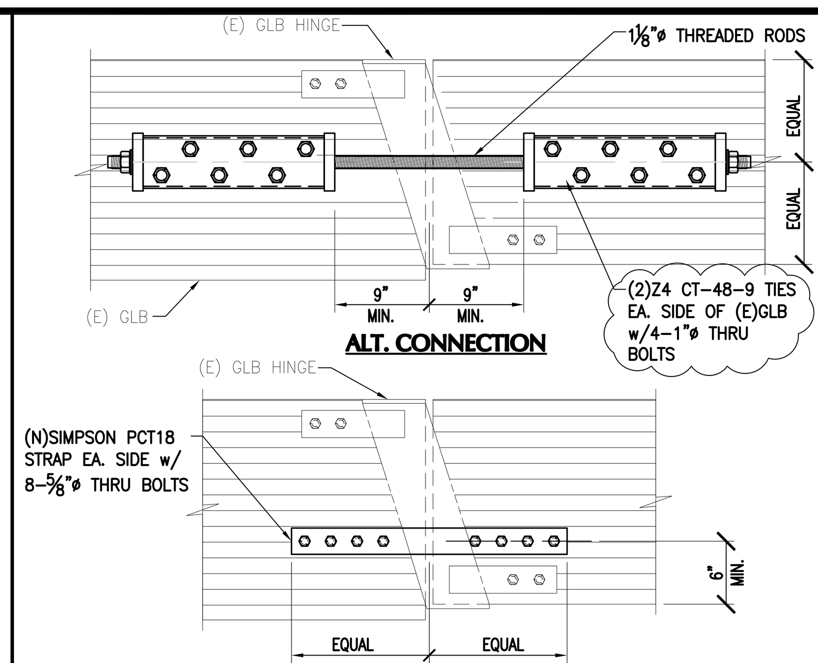

TYPICAL GIRDER HINGE

2

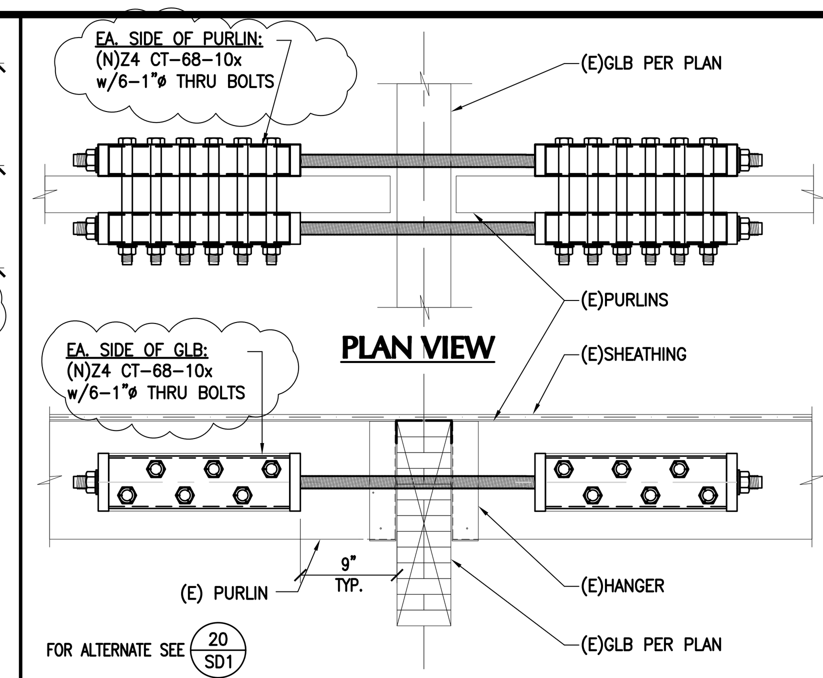

TYPICAL CROSS-TIE

3

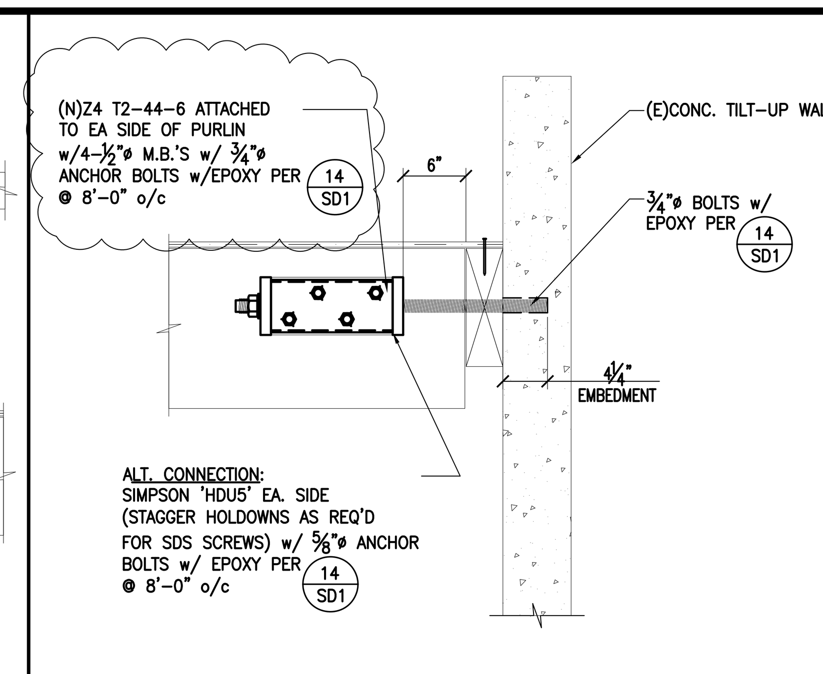

4

PROCEDURE

1. **EPOXY SHALL <u>NOT</u> BE USED UNLESS SPECIFICALLY DETAILED ON THE DRAWINGS OR WITH PRIOR APPROVAL OF THE STRUCTURAL ENGINEER.**
2. THREADED ROD OR DOWELS EMBEDDED IN EPOXY SHALL BE INSTALLED PER MANUFACTURER'S INSTRUCTIONS.
3. CORRECT IMPLEMENTATION OF THE MANUFACTURER'S INSTRUCTIONS FOR INSTALLATION SHALL BE VERIFIED BY A SPECIAL INSPECTOR.
4. ONLY NON–REBAR–CUTTING DRILL BITS SHALL BE USED TO DRILL HOLES IN EXISTING CONCRETE.
5. THREADED ROD OR DOWEL EMBEDMENT SHALL BE VERIFIED AND DOCUMENTED BY A SPECIAL INSPECTOR
6. EPOXY SHALL BE HILTI HY150 (LARR #25257), OR SIMPSON EPOXY TIE SET–XP (LARR #25744). HILTI HIT–RE 500–SD (LARR #25700)
7. DRILL HOLES SHALL BE CLEAN OF CONCRETE DUST AND DEBRIS USING EITHER A NYLON BRUSH AND A VACUUM OR A NYLON BRUSH AND OIL–FREE COMPRESSED AIR. A BLOW–OUT BULB MAY BE USED IF A VACUUM OR COMPRESSED AIR IS NOT AVAILABLE. CLEANLINESS OF DRILL HOLES SHALL BE VERIFIED AND DOCUMENTED BY SPECIAL INSPECTOR.
8. PLACE EPOXY IN HOLE WITH CAULKING GUN OR SIMILAR EQUIPMENT, STARTING AT BOTTOM, FILL HOLE APPROXIMATELY 2/3 FULL
9. COAT ROD OR REBAR WITH SAME EPOXY AND INSERT INTO HOLE.

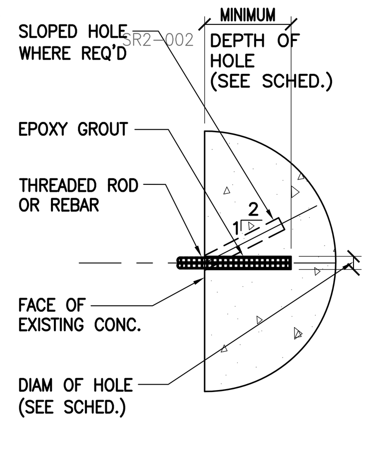

ROD HOLE SIZE

ROD SIZE	BIT DIAM.	MIN. DEPTH U.N.O. IN DETAILS
⅜"	7/16"	3½"
½"	9/16"	4¼"
⅝"	11/16"	5"
¾"	13/16"	6¾"
⅞"	15/16"	7¾"
1"	1 1/16"	9"

SR2–004

MANUFACTURER	ROD DIAM.	EMBEDMENT	TENSION LOAD	EDGE DISTANCE	SPACING	SHEAR LOAD
	⅞"ø	6"	2890#	5¼"	7½"	2320#
		7¾"	5150#	11¼"	10¼"	4250#
		7¾"	7355#	11¼"	15"	6080#
		11¼"	8420#	17"	22½"	6080#
SIMPSON SET–XP	⅞"ø	7¾"	4535#	11⅝"	10¼"	3350#
		7¾"	5100#	11⅝"	31"	3350#

C8–016

TYPICAL EPOXY ANCHORS - CITY OF L.A.

14

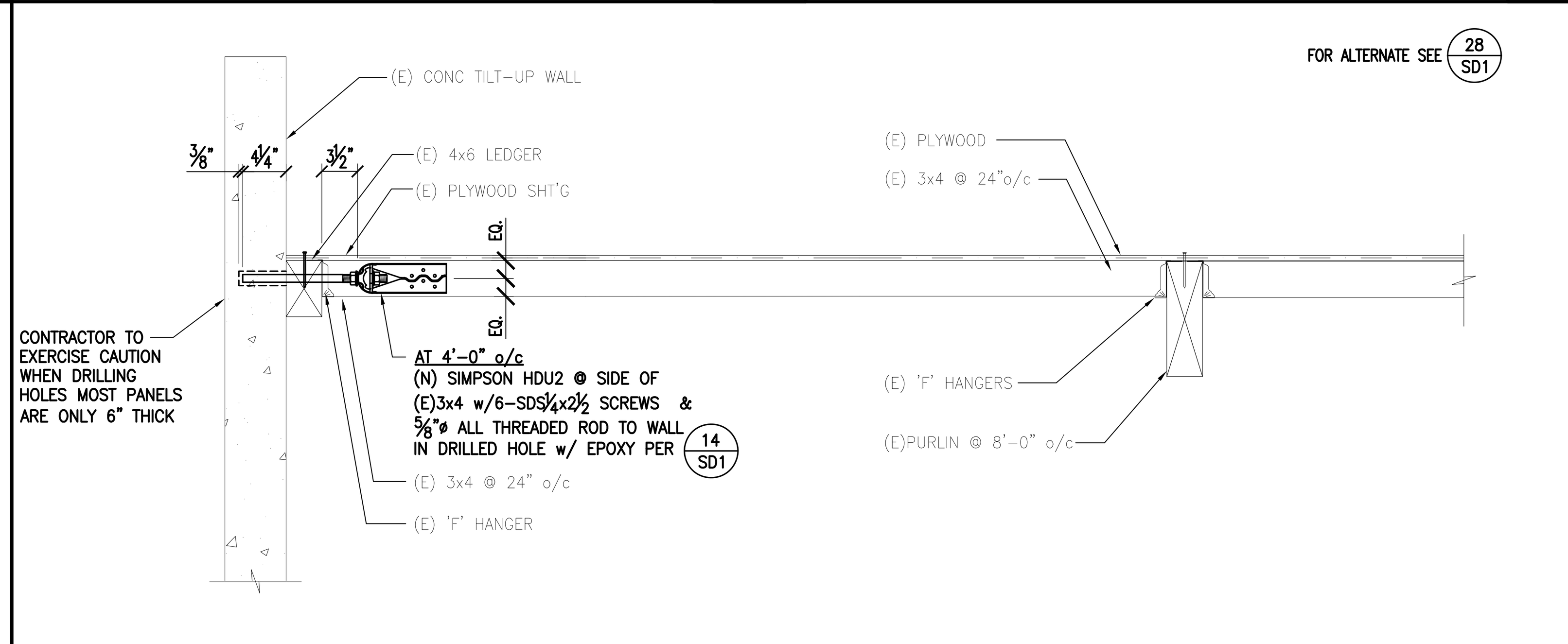

10

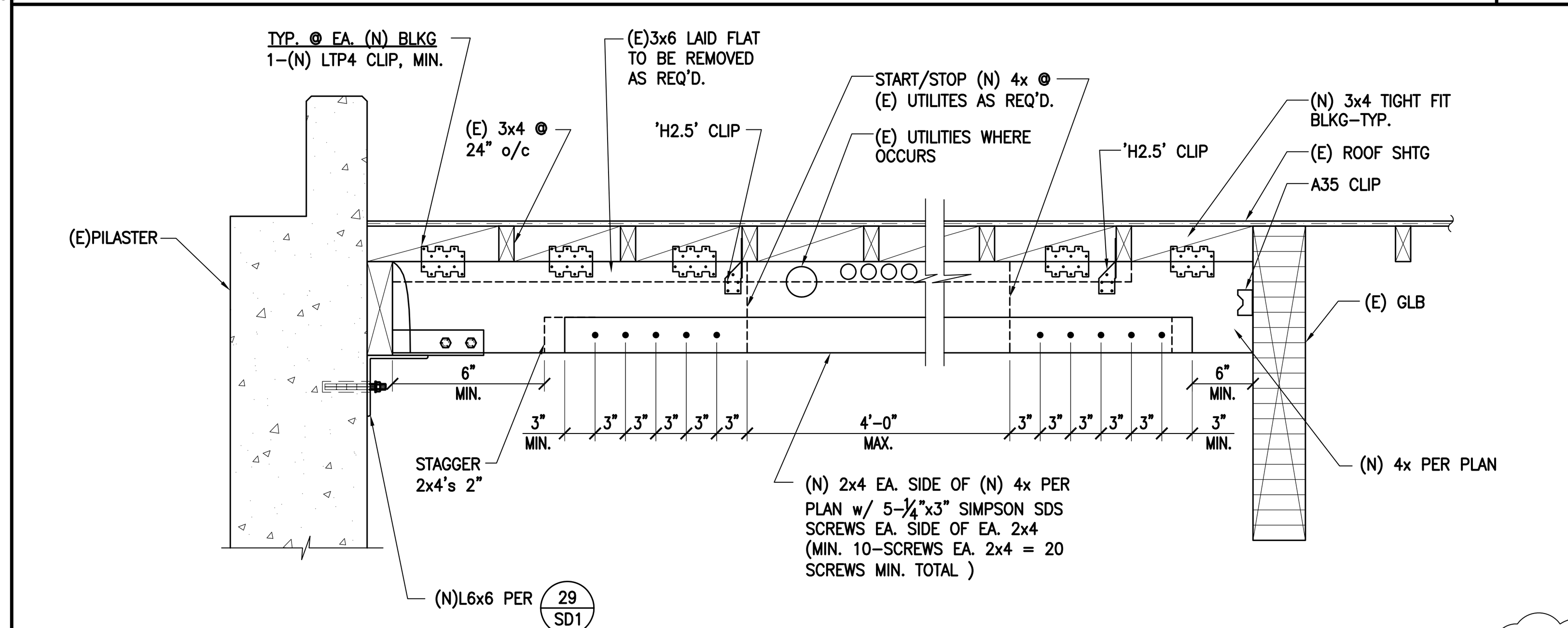

SR4–002

16

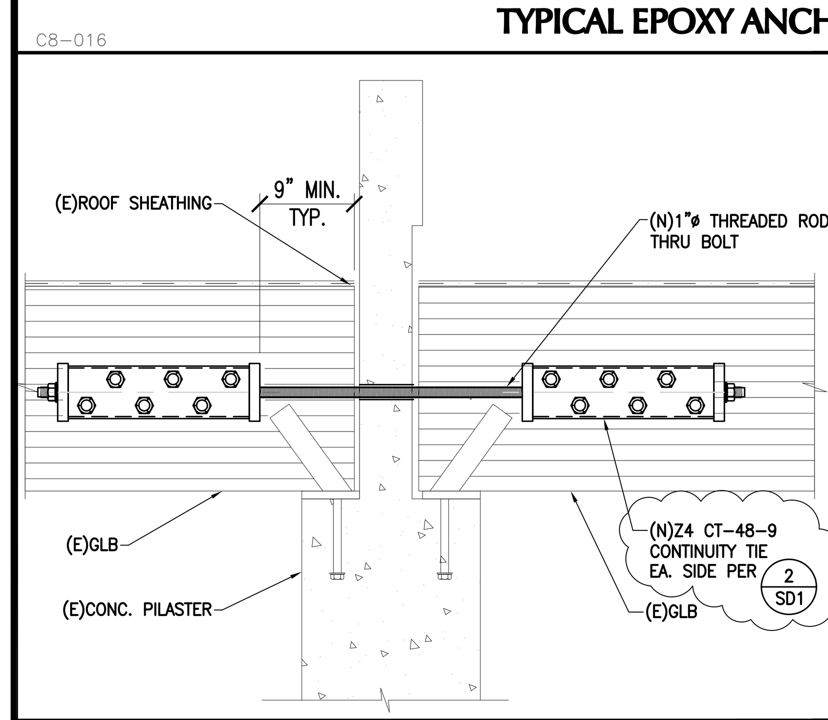

19

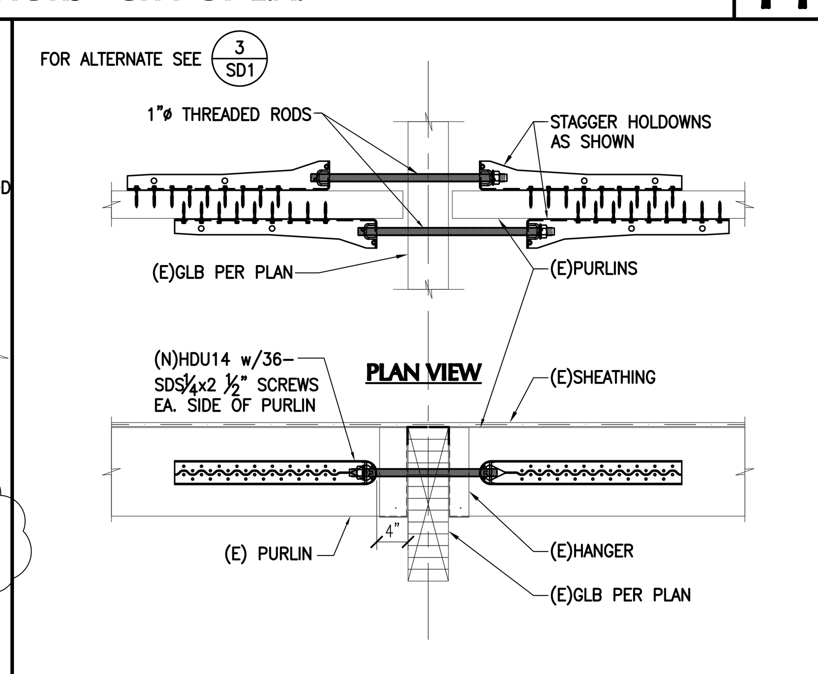

20

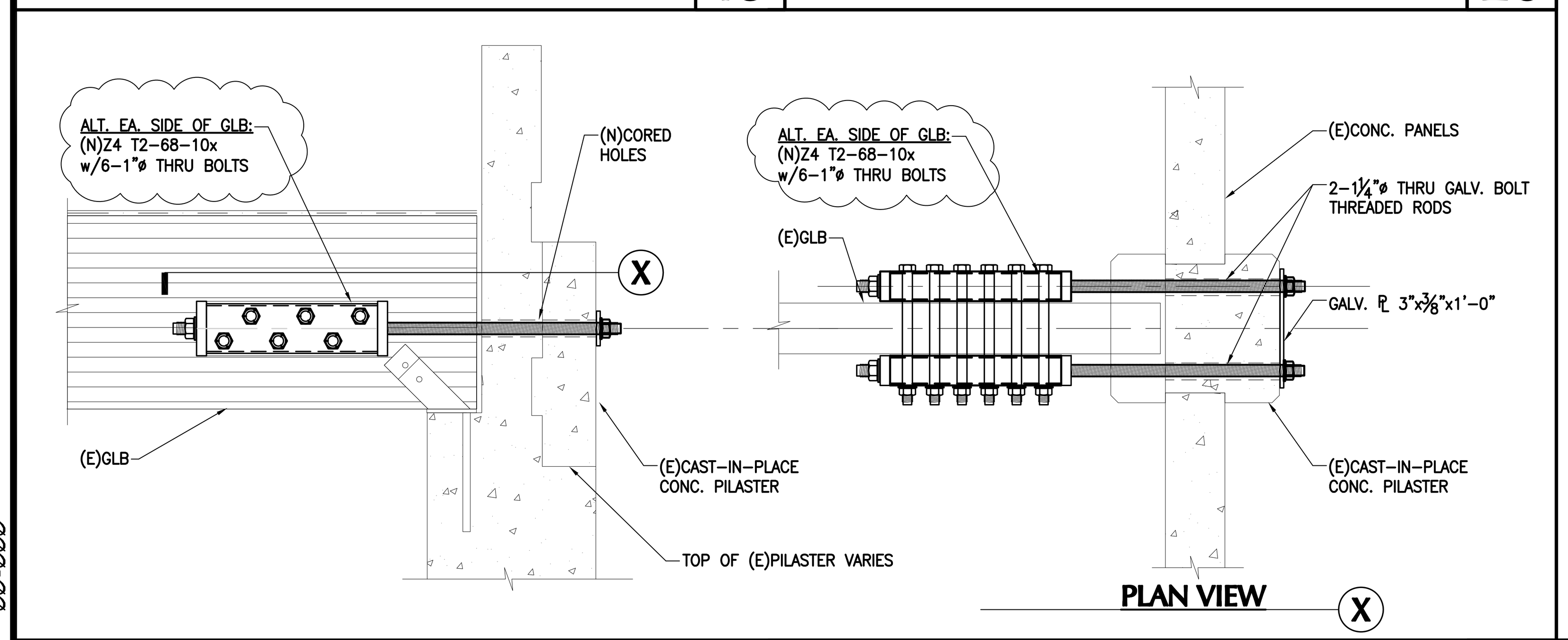

26

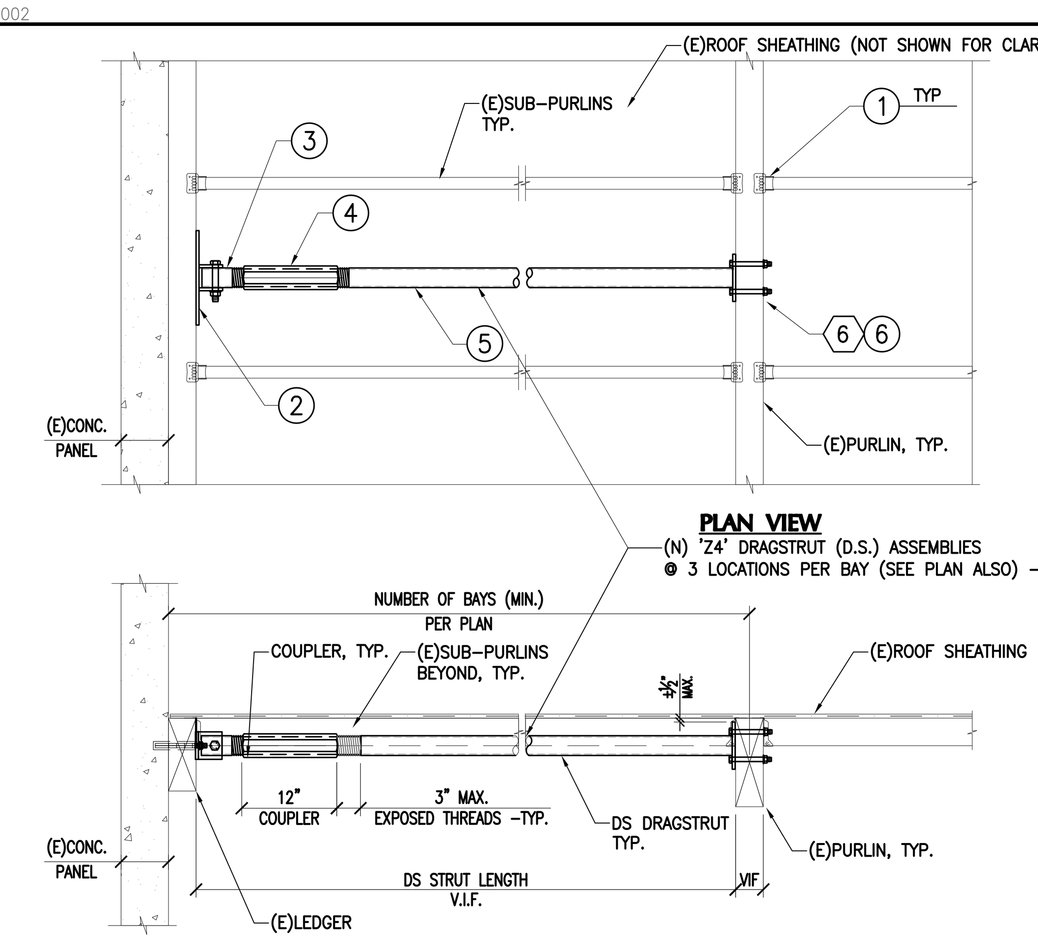

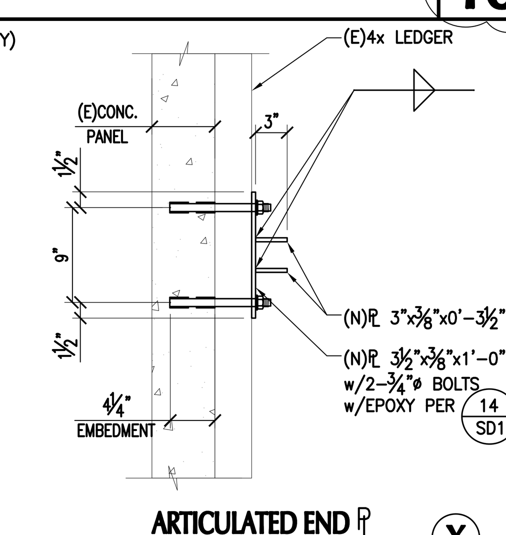

ARTICULATED END ℞ (X)

LEGEND:

1. WHERE GAPS AT ENDS OF (E)SUB–PURLINS ARE EQUAL TO OR EXCEED 0.05", PROVIDE SOLID FLAT AND WEDGE SHIMS AS REQUIRED.
2. ARTICULATED END ℞ PER (X)
3. 2"ø STANDARD PIPE w/THREADED ENDS PROVIDED BY ZONE FOUR.
4. DS DRAGLINE COUPLER ELEMENT WITH DS DRAGLINE STRUT DESIGNATION.
5. DS DRAGLINE STRUT
6. DS DRAGLINE STRUT END ℞ w/ ¾"ø THRU BOLTS.

FOR ALTERNATE SEE 10/SD1

INSTALLATION SEQUENCE:

1. CONTRACTOR SHALL BE RESPONSIBLE FOR AND PROVIDE ALL FIELD MEASUREMENTS TO ZONE FOUR MANUFACTURER FOR DETERMINATION OF CORRECT HARDWARE AND SIZES. ALL DRAGLINE STRUTS (DS) SHALL BE MANUFACTURED BY ZONE FOUR.
2. SHIM ENDS OF ALL (E)SUB–PURLINS PER (1) AS REQUIRED.
3. INSTALL ARTICULATED END PER (2) AND (X)
4. INSTALL FIRST D.S TO WALL MOUNTED ARITCULATED AND WITH ¾"ø M.B.'S, LOCK WASHER AND NUT PROVIDED BY ZONE FOUR.
5. INSTALL COUPLER AND ADJUST TO WIDTH OF PURLIN BAY.
6. ATTACH FIXED END CONNECTOR TO INTERMEDIATE PURLIN AND INSTALL THRU BOLTS PER MFR.
7. INSTALL/ALIGN NEXT BAY'S 'Z4' DRAGLINE STRUT OVER THRU BOLTS AND ADD COUPLER PER (5) AND REPEAT FROM STEP (4) AS REQUIRED.

TYPICAL ZONE FOUR DRAGLINE ASSEMBLY

28

STRUCTURAL TESTS & INSPECTIONS REQ'D FOR THIS PROJECT

1. REFER TO SECTIONS 109 AND 1704 OF THE 2010 INTERNATIONAL BUILDING CODE FOR AMPLIFICATION OF THE FOLLOWING REQUIREMENTS: ALL CERTIFIED SPECIAL INSPECTORS MUST SUBMIT FINAL REPORTS AS SOON AS TESTS AND INSPECTIONS ARE PERFORMED. REPORTS SHALL BE DISTRIBUTED TO THE OWNER, CONTRACTOR, ARCHITECT, STRUCTURAL ENGINEER, AND BUILDING DEPARTMENT AS REQUIRED. ALL TEST AND INSPECTIONS SHALL BE PERFORMED BY AN INDEPENDENT TESTING AND INSPECTION AGENCY EMPLOYED BY THE OWNER OR AGENT OF THE OWNER AND <u>NOT</u> THE CONTRACTOR PER IBC SECTION 1704
   TEST/INSPECTION REQ'D FOR THIS PROJECT (YES/NO)
   INSPECTION FREQUENCY

Item	Inspection frequency	Req'd (YES/NO)
2. WELDING:		
A. SPECIAL INSPECTOR VERIFICATION OF MATERIALS, QUALIFICATIONS OF WELDING PROCEDURES AND WELDERS PRIOR TO START OF WORK.		NO
B. VISUAL INSPECTION OF ALL STRUCTURAL WELDING (EXCEPT AS LISTED IN ITEM C.)	CONTINUOUS	NO
C. VISUAL INSPECTION OF SINGLE PASS FILLET WELDS NOT EXCEEDING 5/16" INCH, FLOOR & ROOF DECK WELDING, WELDED STUDS, SHEET METAL, COLD FORMED STEEL FRAMING, STAIRS AND RAILING SYSTEMS, AS ALLOWED PER IBC SECTION 1704.3 EXCEPTIONS.	PERIODIC	NO
D. VISUAL INSPECTION OF WELDING OF REINFORCING STEEL.	CONTINUOUS	NO
E. VERIFY WELDABILITY OF REINFORCING STEEL OTHER THAN ASTM A706	PERIODIC	NO
F. NON–DESTRUCTIVE TESTING OF FULL PENETRATION WELDS IN MATERIALS EXCEEDING ¼" THICK.	CONTINUOUS	NO
3. BOLTING:		
A. VISUAL INSPECTION OF HIGH STRENGTH BOLTING	PERIODIC	NO
B. VISUAL INSPECTION OF EXPANSION BOLTS IN CONCRETE OR MASONRY	CONTINUOUS	NO
C. VISUAL INSPECTION OF INSTALLATION OF EPOXY ANCHORED BOLTS, RODS, OR REBAR	CONTINUOUS	YES
D. HIGH STRENGTH BOLTS, NUTS & WASHERS (CERTIFICATE OF COMPLIANCE)	PERIODIC	NO
4. STRUCTURAL STEEL		
A. MILL REPORTS & IDENTIFICATION OF STEEL (AFFIDAVIT OF COMPLIANCE).		NO
B. SAMPLING & TESTING.	PERIODIC	NO
C. STEEL FRAME JOINT DETAILS AND MEMBER LOCATIONS.	PERIODIC	NO
5. COLD -FORMED STEEL		
A. WELDING ELEMENTS OF SEISMIC–FORCE–RESISTING SYSTEM.	PERIODIC	NO
B. SCREWS, BOLTS, ANCHORS AND OTHER TYPES OF FASTENERS FOR COMPONENTS OF SEISMIC–FORCE–RESISTING SYSTEM.	PERIODIC	NO
6. WOOD		
A. FIELD GLUING OF SEISMIC–FORCE–RESISTING ELEMENTS	CONTINUOUS	NO
B. NAILING, BOLTING, ANCHORING AND OTHER FASTENING OF SEISMIC–FORCE–RESISTING ELEMENTS WHERE SHEATHING NAILING IS 4 INCHES ON CENTER OR LESS. (INCLUDES: ROOF, FLOOR, AND WALL SHEATHING, GRADES, THICKNESSES, AND NAILING. BOLTING/SCREWING TO HOLDOWNS, POSTS, MEMBERS, BRACES, AND "STRUTS".)	PERIODIC	YES
C. <u>HIGH–LOAD DIAPHRAGMS:</u> VISUAL INSPECTION OF SHEATHING GRADE, THICKNESS AND PLACEMENT, FRAMING MEMBER SIZE AT PANEL EDGES, NAIL DIAMETER AND LENGTH, NAIL SPACINGS AND EDGE MARGINS, AND ROWS OF NAILS	PERIODIC	NO
7. APPROVED FABRICATORS (MUST SUBMIT CERTIFICATION OF COMPLIANCE)		
A. FOR ALL OFFSITE FABRICATION SUCH AS STRUCTURAL STEEL, GLU–LAMS AND OTHER PREFABRICATED WOOD ELEMENTS, PRECAST CONCRETE, SHOP WELDING, ETC.		NO

8. JOB SITE VISITS BY THE STRUCTURAL ENGINEER DO NOT CONSTITUTE AN OFFICIAL INSPECTION. COPIES OF TEST RESULTS SHALL BE FURNISHED TO THE STRUCTURAL ENGINEER IN ADDITION TO OTHER NORMAL DISTRIBUTIONS.

NOTE: <u>IT IS THE CONTRACTOR'S SOLE RESPONSIBILITY TO SEE THAT THESE TESTS AND INSPECTIONS ARE PERFORMED.</u>

GENERAL NOTES

1. THE GENERAL CONTRACTOR SHALL VERIFY ALL DIMENSIONS AND SITE CONDITIONS BEFORE STARTING WORK. THE ARCHITECT OR ENGINEER SHALL BE NOTIFIED OF ANY DISCREPANCY.
2. NOTES & DETAILS ON DRAWINGS SHALL TAKE PRECEDENCE OVER THESE GENERAL NOTES.
3. ALL MATERIAL & WORKMANSHIP SHALL CONFORM TO THE 2011 LOS ANGELES COUNTY BUILDING CODE AND THE 2010 CALIFORNIA BUILDING CODE.
4. THE DESIGN, ADEQUACY & SAFETY OF ERECTION BRACING, SHORING, TEMPORARY SUPPORTS, FORMS ETC., IS THE SOLE RESPONSIBILITY OF THE CONTRACTOR, AND HAS NOT BEEN CONSIDERED BY THE STRUCTURAL ENGINEER. THE CONTRACTOR IS RESPONSIBLE FOR MEANS AND METHODS OF CONSTRUCTION TO INSURE THE STABILITY OF THE STRUCTURE PRIOR TO THE APPLICATION OF ALL WALLS, ROOF & FLOOR SHEATHING AND FINISH MATERIALS. HE SHALL PROVIDE THE NECESSARY BRACING TO PROVIDE STABILITY PRIOR TO THE APPLICATION OF THE AFOREMENTIONED MATERIALS. THE CONTRACTOR IS RESPONSIBLE FOR COMPLIANCE WITH OSHA REQUIREMENTS INCLUDING, BUT NOT LIMITED TO, THE ADDITION OF ANCHOR BOLTS AND/OR TEMPORARY BRACING TO INSURE COLUMN STABILITY DURING CONSTRUCTION. OBSERVATION VISITS TO THE SITE BY THE STRUCTURAL ENGINEER SHALL NOT INCLUDE INSPECTION OF THE ABOVE ITEMS.
5. THE CONTRACTOR SHALL HAVE SOLE RESPONSIBILITY FOR SITE SAFETY. ANY FABRICATOR AND ERECTOR SHALL REVIEW THE CONTRACT DOCUMENTS AND IF THE STRUCTURE, AS SHOWN ON THOSE DOCUMENTS, IS IN CONFLICT WITH THE REQUIREMENTS OF ANY SAFETY REGULATION, THE FABRICATOR SHALL NOTIFY THE STRUCTURAL ENGINEER (STB) PRIOR TO COMMENCING SHOP DRAWING PRODUCTION. IF THE FABRICATOR AND/OR ERECTOR FAIL TO NOTIFY STB, AS STATED ABOVE, THEY SHALL BECOME RESPONSIBLE FOR ALL COSTS FOR CORRECTING SUCH CONFLICTS WITH THE REQUIREMENTS OF ANY AND ALL SAFETY REGULATIONS.
6. IT SHALL BE THE RESPONSIBILITY OF THE CONTRACTOR TO LOCATE ALL EXISTING UTILITIES WHETHER SHOWN HEREON OR NOT AND TO PROTECT THEM FROM DAMAGE. THE CONTRACTOR SHALL BEAR ALL EXPENSE OF REPAIR OR REPLACEMENT IN CONJUNCTION WITH THE EXECUTION OF THIS WORK.
7. DESIGN CRITERIA:
   1. DEAD AND LIVE LOADS
      SEE FRAMING PLANS
   2. SNOW LOADS
      GROUND SNOW LOAD, Pg=0
   3. OCCUPANCY CATEGORY: = II
   4. WIND LOADS:
      BASIC WIND SPEED, V_{3S} =85 MPH
      WIND IMPORTANCE FACTOR, I = 1.0
      WIND EXPOSURE= C
      INTERNAL PRESSURE COEFFICIENT = ±0.18
      COMPONENTS AND CLADDING WIND PRESSURE = 17.7 PSF
   5. SEISMIC DESIGN CRITERIA:
      SEISMIC IMPORTANCE FACTOR, I = 1.0
      SEISMIC DESIGN CATEGORY: D
      SITE CLASS: D
      SEISMIC FORCE RESISTING SYSTEM: PRECAST CONC. SHEAR WALLS
      R= 4 Ω_o= 2.5
      S_s=1.537 Fa= 1.0 S_{DS} = 1.025
      S_1 =0.549 Fv= 1.5 S_{D1} =0.549

EXISTING CONDITIONS

1. INFORMATION FOR EXISTING BUILDINGS HAS BEEN BASED UPON ORIGINAL DESIGN DRAWINGS PREPARED BY: JOHN R. ANDERSON, DATED JUNE 28, 1966 AND TENANT IMPROVEMENT DRAWINGS PREPARED BY HBA DATED 10–16–87. CONTRACTOR SHALL VERIFY ALL EXISTING CONDITIONS. WHERE EXISTING CONDITIONS ARE FOUND TO BE DIFFERENT FROM CONDITIONS SHOWN ON THESE DRAWINGS, THE CONTRACTOR SHALL NOTIFY THE ARCHITECT/ENGINEER SO THAT A CHANGE ORDER CAN BE ISSUED.
2. DO NOT ALTER OR REMOVE ANY EXISTING BEARING WALLS OR BEAMS UNLESS SO IDENTIFIED ON THE DRAWINGS, APPROPRIATE DETAILS ARE PROVIDED, AND APPROVED BY THE STRUCTURAL ENGINEER AND BUILDING DEPARTMENT.
3. ALTERATIONS SHOWN ON THESE DRAWINGS TO THE EXISTING STRUCTURE ARE NOT INTENDED TO BRING THE EXISTING BUILDING UP TO NEW CODE, STB STRUCTURAL ENGINEERS, INC. HAS <u>NOT</u> REVIEWED NOR ANALYZED THE EXISTING BUILDING STRUCTURE'S LATERAL FORCE RESISTING SYSTEM SINCE IT IS BEYOND THE SCOPE OF WORK FOR THIS CONTRACT.

STRUCTURAL OBSERVATION

1. STRUCTURAL OBSERVATION BY THE ENGINEER/ARCHITECT SHALL BE PERFORMED. A STATEMENT IN WRITING SHALL BE GIVEN TO THE BUILDING OFFICIAL, STATING THAT THE SITE VISITS HAVE BEEN MADE AND WHETHER, OR NOT ANY OBSERVED DEFICIENCIES HAVE BEEN CORRECTED TO CONFORM TO THE APPROVED PLANS AND SPECIFICATIONS.
2. STRUCTURAL OBSERVATION IS REQUIRED FOR THE FOLLOWING:
   A. AT COMPLETION OF WORK
3. OBSERVED DEFICIENCIES SHALL BE REPORTED IN WRITING TO THE OWNER'S REPRE SENTATIVE , SPECIAL INSPECTOR, CONTRACTOR AND THE BUILDING OFFICIAL.
4. THE STRUCTURAL OBSERVER SHALL SUBMIT TO THE BUILDING OFFICIAL A WRITTEN STATEMENT THE THE SITE VISITS HAVE BEEN MADE AND IDENTIFYING ANY REPORTED DEFICIENCIES THAT TO THE BEST OF THE STRUCTURAL OBSERVER'S KNOWLEDGE, HAS BEEN RESOLVED.
5. THE WRITTEN STATEMENT SHALL BE SUBMITTED TO THE BUILDING OFFICIAL BEFORE REQUESTING ANY APPLICABLE BUILDING INSPECTION.

ABBREVIATIONS

(SEE ARCH'L AND OTHER STANDARDS FOR ADD'L)

ALT.	= ALTERNATE	M.B.	= MACHINE BOLT
B	= BOTTOM	N.T.S	= NOT TO SCALE
B. ℞	= BASE PLATE	N.S.	= NEAR SIDE
BM.	= BEAM	OPP.	= OPPOSITE ON CENTER
C.	= CAMBER	o/c	= ON CENTER
C.J.	= CONSTRUCTION JOINT	OWJ	= OPEN WEB JOIST
℄	= CENTER LINE	℞	= PLATE
CONC.	= CONCRETE	PIL.	= PILASTER
CONT.	= CONTINUOUS	P.J.	= PANEL JOINT
CTSK.	= COUNTER SUNK	PWJ.	= WOOD 'I' JOIST
D.	= DEPTH	PTDF.	= PRESSURE TREATED DOUGLAS FIR
E.F.	= EACH FACE	P/T	= POST–TENSIONED (CONCRETE)
E.W.	= EACH WAY	S.D.S	= SELF DRILLING SCREW
EXP.	= EXPANSION	SIM.	= SIMILAR
E.J.	= EXPANSION JOINT	S.M.S.	= SHEET METAL SCREW (SAME AS SDS)
F.O.C.	= FACE OF CONCRETE	S.P.C.	= STANDARD PIPE COLUMN
F.O.M.	= FACE OF MASONRY	STL.	= STEEL
F.O.S.	= FACE OF STUD	T.O.F.	= TOP OF FOOTING
F.S.	= FAR SIDE	T.O.S.	= TOP OF STEEL
GLB	= GLUE–LAMINATED BEAM	T.O.W.	= TOP OF WALL
GRD. BM.	= GRADE BEAM	TS.	= TUBE STEEL
HDR.	= HEADER	TYP.	= TYPICAL
HGR.	= HANGER	U.N.O	= UNLESS NOTED OTHERWISE
H.R.	= HARDROCK (CONCRETE)	V.I.F.	= VERIFY IN FIELD
HSS	= HOLLOW STRUCTURAL SECTION	W.S.	= WOOD SCREW
K.	= KIPS	(E)	= EXISTING (CONSTRUCTION)
K.P.	= KING POST	(N)	= NEW (CONSTRUCTION)
LLV.	= LONG LEG VERTICAL		
LLH.	= LONG LEG HORIZONTAL		
LT. WT.	= LIGHT WEIGHT (CONCRETE)		

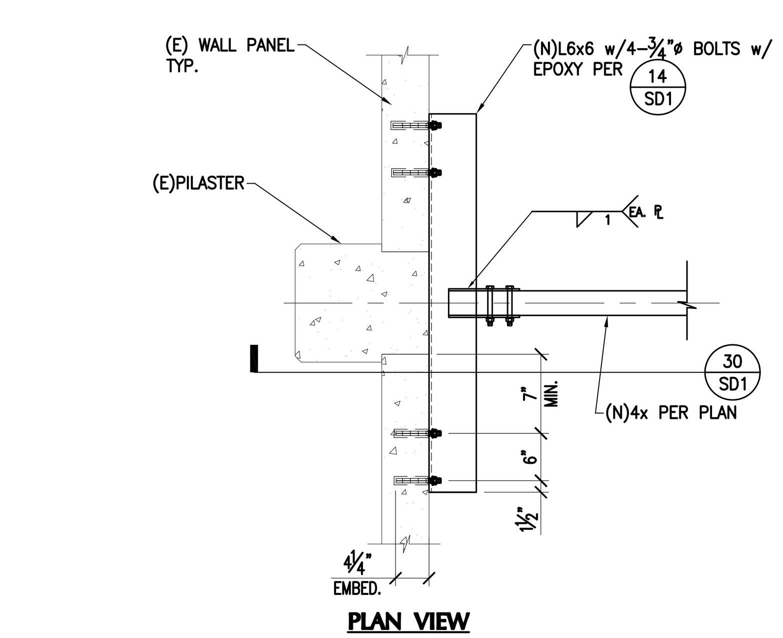

29

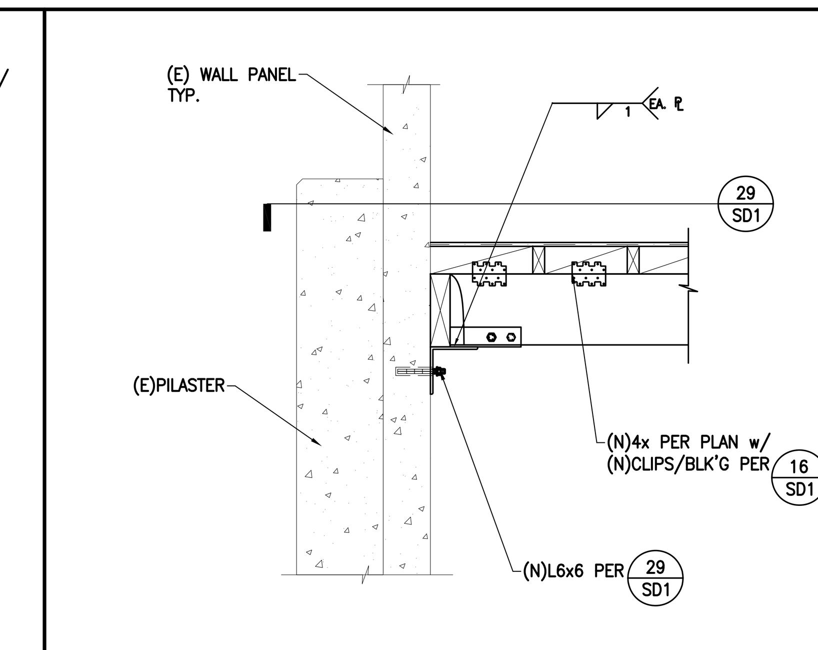

30

REVISIONS

REGISTERED STRUCTURAL ENGINEER DOUGLAS S. THOMPSON NO. 2578 EXP.3/31/12 STATE OF CALIFORNIA

STB STRUCTURAL ENGINEERS, INC
21084 Bake Parkway, Suite 100 Lake Forest, CA 92630
(949) 599-0320 Fax: 599-0325 mail@stbse.com

© 2011, STB Structural Engineers, Inc.

JOB NUMBER: 11–071 PROJECT ENGINEER: MDT

DATE: 05–03–11
DRAWN BY: osm
CHECKED BY: DST
JOB No. 11–071

CLIENT:
THE REALTY ASSOCIATES FUND IX, LP
5100 BIRCH ST. SUITE 100
NEWPORT BEACH, CA 92660

NOTES AND DETAILS

VOLUNTARY CHAPTER 95 EARTHQUAKE HAZARD REDUCTION

15910 VALLEY VIEW AVENUE LA MIRADA, CA

SHEET

SD-1

00-000

H:\2011\11-071\S-1.dwg Jul 01, 2011 – 2:24pm miket